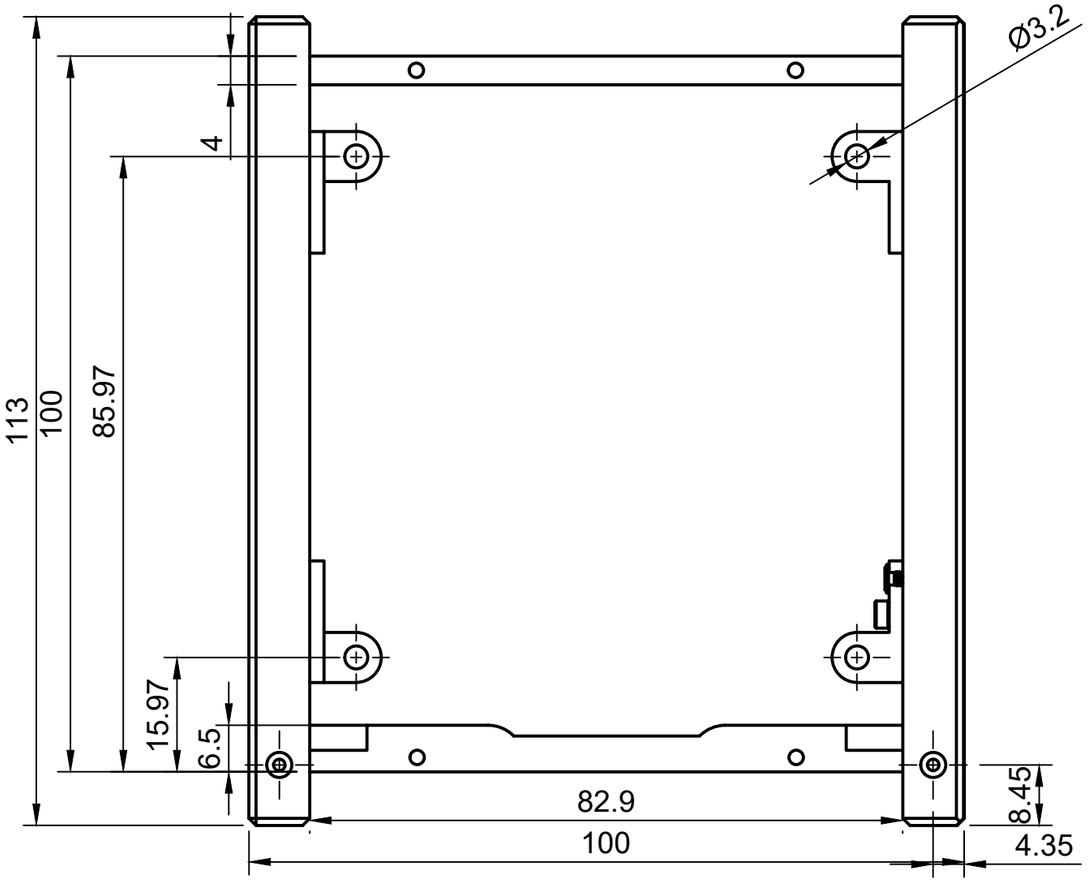

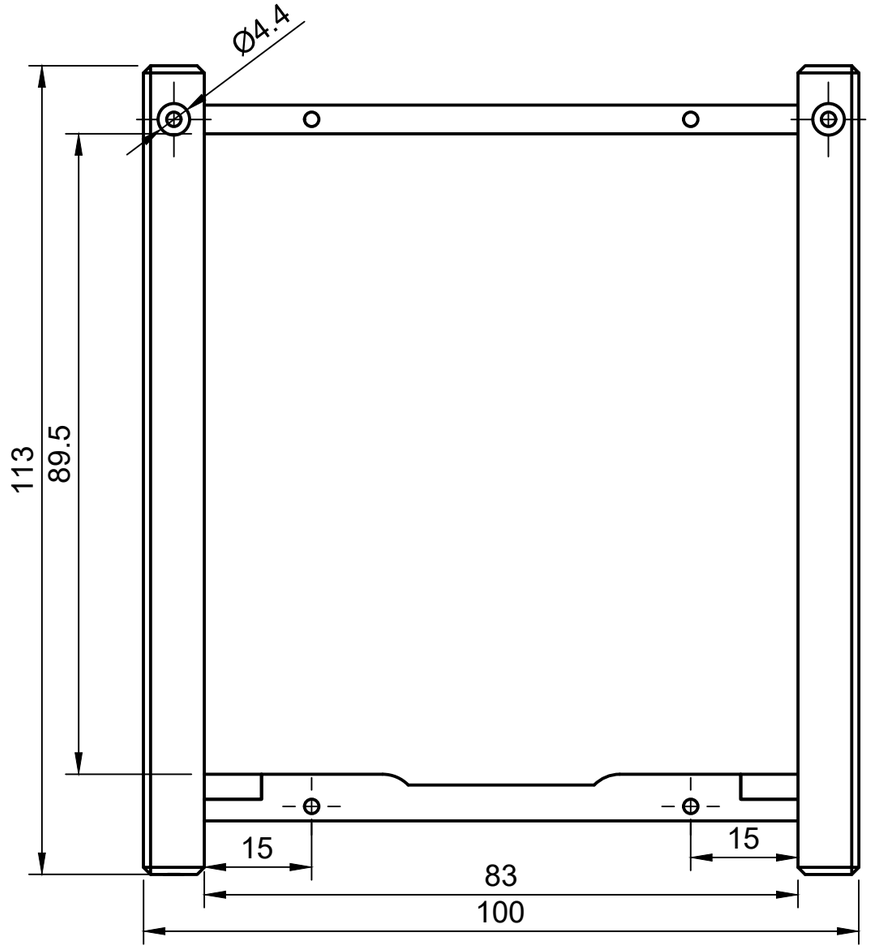

Dept.	Technical reference	Created by	Approved by
		SlippersTo Satellite 12/25/2024	
		Document type	Document status
		Title	DWG No.
		BPB_ANT_MTHR_BRD_ASSEM	
		Rev. / Date of issue	Sheet
			1/2

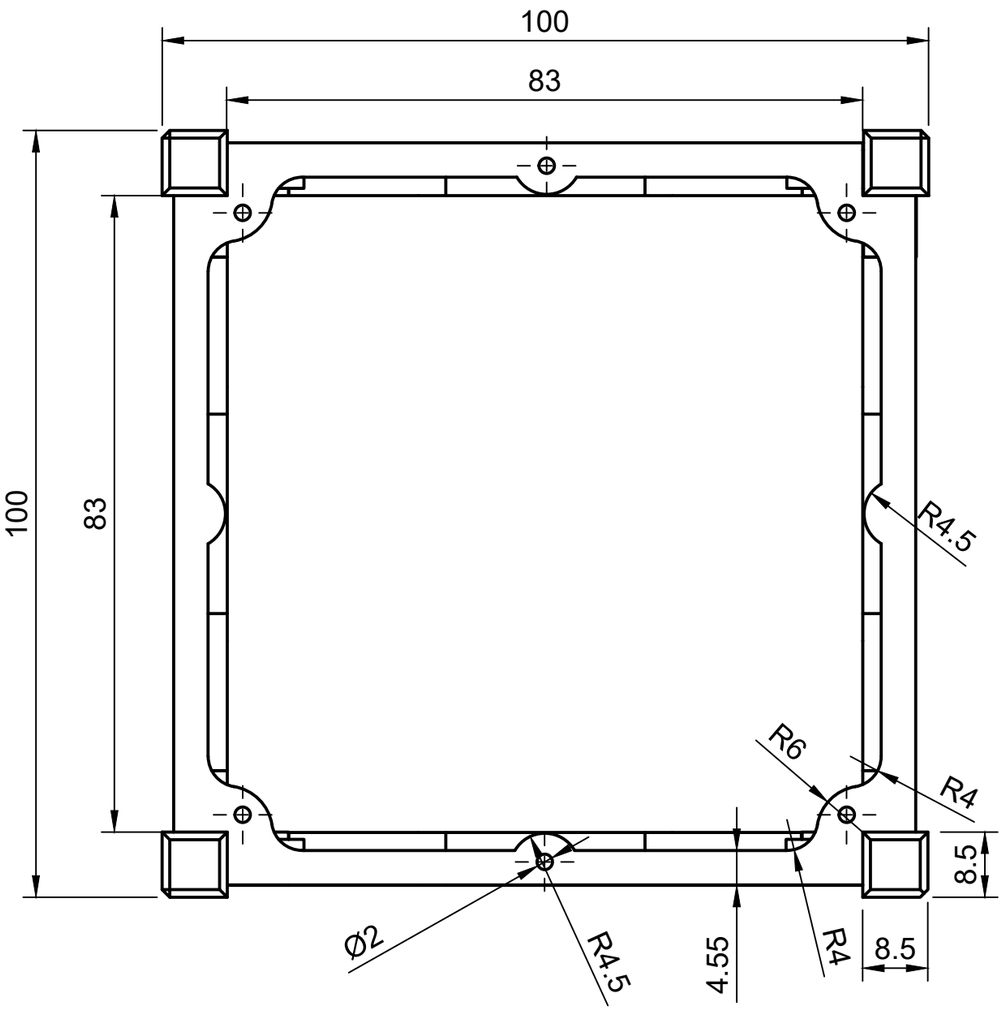

Dept.	Technical reference	Created by	Approved by
		SlippersTo Satellite 12/25/2024	
		Document type	Document status
		Title	DWG No.
		BPB_ANT_MTHR_BRD_ASSEM	
		Rev. / Date of issue	Sheet 2/2